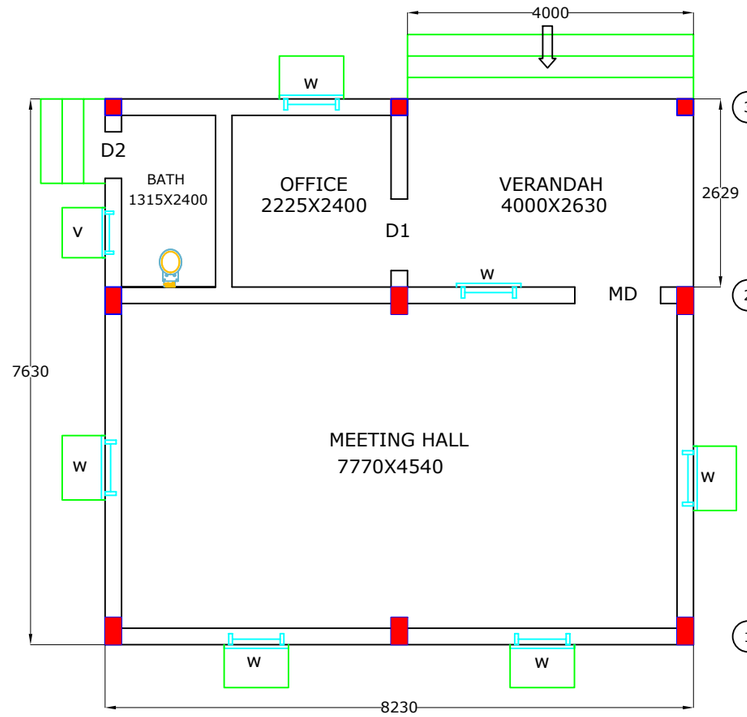

BASEMENT LEVEL PLAN

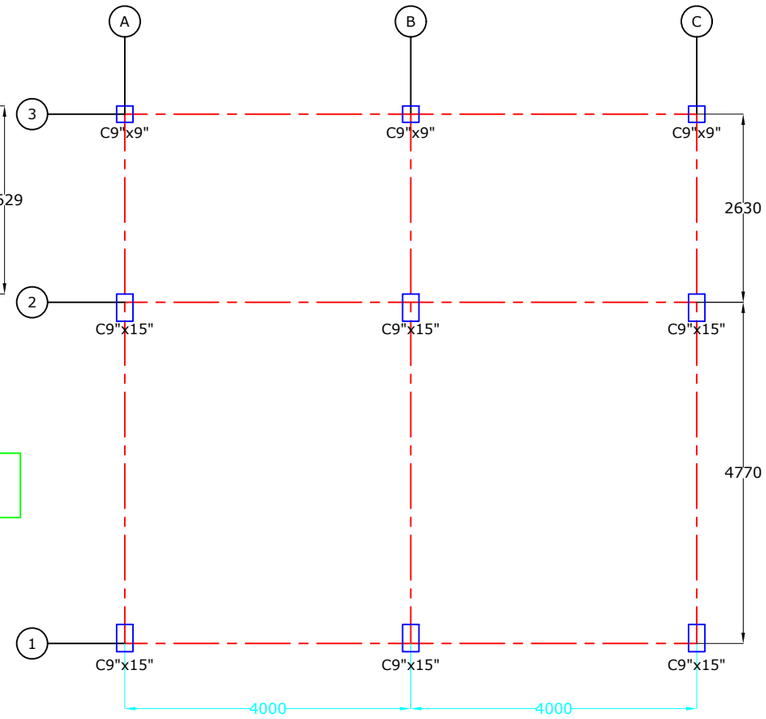

COLUMN LAY OUT PLAN

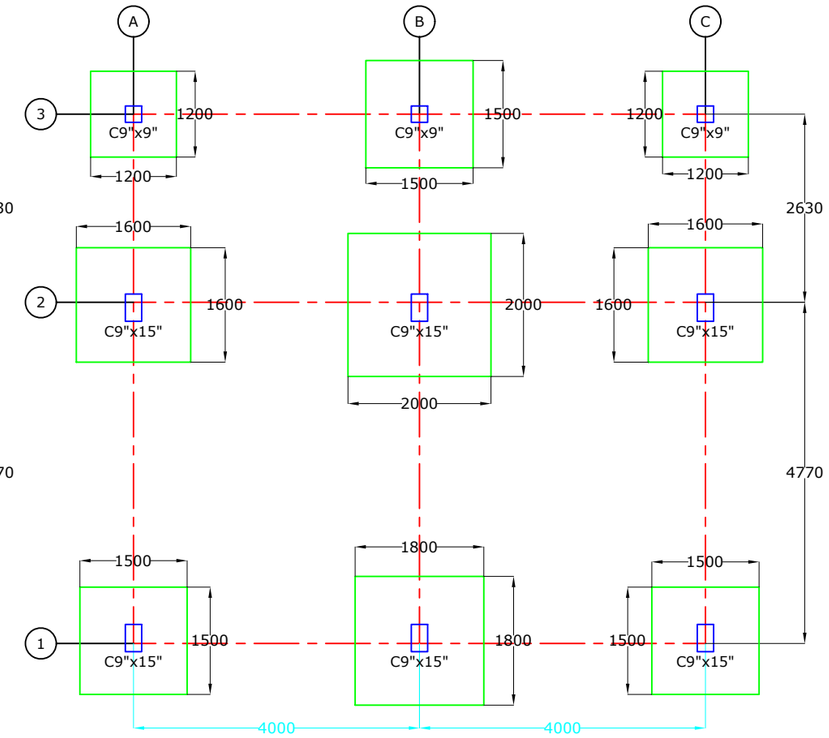

FOOTING LAY OUT PLAN

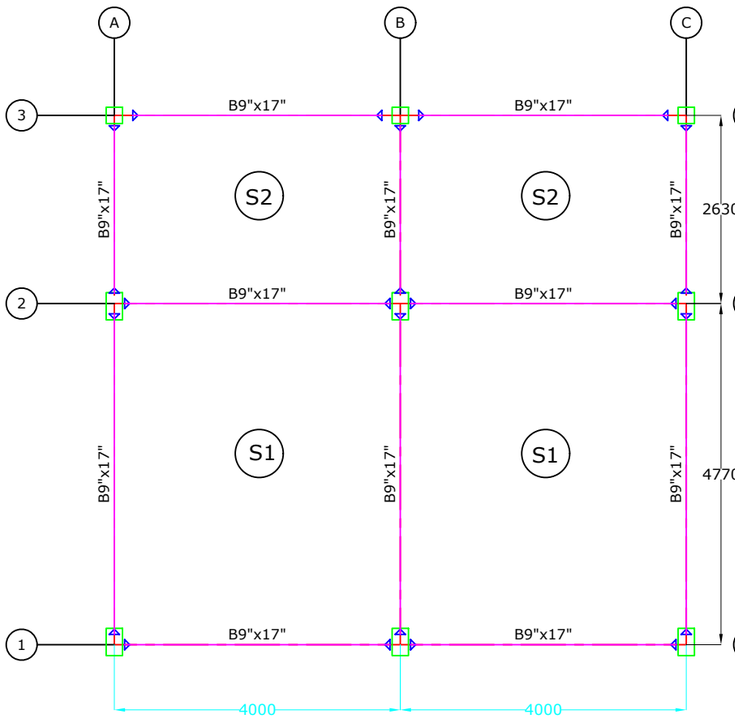

ROOF BEAM PLAN

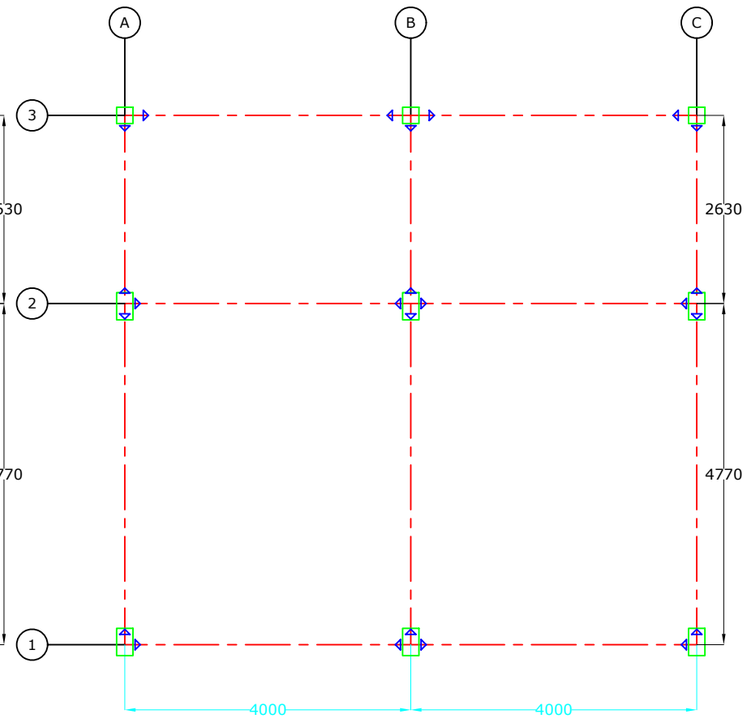

PLINTH BEAM PLAN

LEGEND

Column & Footing schedule				
Column grid No	Column steel	Column size in mm	Footing Size in mm	Depth of footing in mm
A1	6-20Ø	C230x350	1500x1500	300
B1	8-20Ø	C230x350	1800x1800	450
C1	6-20Ø	C230x350	1500x1500	300
A2	8-20Ø	C230x350	1600x1600	400
B2	10-20Ø	C230x350	2000x2000	550
C2	8-20Ø	C230x350	1600x1600	400
A3	4-20Ø	C230x230	1200x1200	300
B3	4-20Ø	C230x230	1500x1500	400
C3	4-20Ø	C230x230	1200x1200	300

Main Door (MD) 1050x2100mm
Office Door (D1) 900x2100mm
Bath Door (D2) 750x2100mm
Windows(w1)900x1350mm
Ventilators (v1) 600x300mm
Sunshade 600mm length
Slab thick is 115mm(M20)

Government of telangana
PANCHAYT RAJ ENGINEERING DEPARTMENT
C/o of DWCRA Building Model plan

TYPICAL GF FLOOR
Plinth area 62.80m² or 675.60 sft
Building Designed for G+1 in ETAB software